xylem
Let's Solve Water

INSTRUCTION MANUAL

INSTALLER: PLEASE LEAVE THIS MANUAL FOR THE OWNER'S USE.

Brazed Plate Heat Exchangers

Southgate Process Equipment, Inc.
87 Hickory Springs Industrial Drive
Canton, GA 30115
Phone: (770) 345-0010
Email: Sales@southgatepe.com
Website: www.southgatepe.com

Southgate Process Equipment, Inc.

Standard Xchange
a xylem brand

Table of Contents

Introduction and Safety……2
Introduction……2
Safety……2
Safety terminology and symbols……2
User Safety……3
Product warranty……4

Product Description……5
General description……5

Installation……6
Piping arrangement……6
Soldering instructions……7
Connection max. torque……7
Mounting max. torque……8

Operation……9
Startup and shutdown procedures……9

Maintenance……10
Cleaning procedures……10

Introduction and Safety

INTRODUCTION

The purpose of this manual is to provide necessary information for:

-Installation

-Operation

-Maintenance

CAUTION:
Read this manual carefully before installing and using the product. Improper use of the product can cause personal injury and damages to property and may void the warranty.

NOTICE:
Save this manual for future reference, and keep it readily available at the location of the unit.

SAFETY

WARNING:
-The operator must be aware of safety precautions to prevent physical injury.
-Operating, installing, or maintaining the unit in any way that is not covered in this manual could cause death, serious injury, or damage to the equipment. This includes any modification to the equipment or use of parts not provided by Xylem. If there is a question regarding the intended use of the equipment, please contact a Xylem representative before proceeding.
-Do not change the service application without the approval of an authorized Xylem representative.

CAUTION:
You must observe the instructions contained in this manual. Failure to do so could result in physical injury, damage, or delays.

Terminology and symbols

It is extremely important that you read, understand, and follow the safety messages and regulations carefully before handling the product. They are published to help prevent these hazards:
-Personal accidents and health problems
-Damage to the product
-Product malfunction

Hazard levels

DANGER:
A hazardous situation which, if not, avoided, will result in death or serious injury

WARNING:
A hazardous situation which, if not, avoided, could result in death or serious injury

CAUTION:
A hazardous situation which, if not, avoided, could result in minor or moderate injury

NOTICE:
-A potential situation which, if not avoided, could result in undesirable conditions
-A practice not related to personal injury

Hazard categories

Hazard categories can either fall under hazard levels or let specific symbols replace the ordinary hazard level symbols.

These are examples of other categories that can occur. They fall under the ordinary hazard levels and may use complementing symbols:
-Crush hazard
-Cutting hazard
-Arc flash hazard

USER SAFETY

General safety rules

Applicable general safety rules:
-Always keep the work area clean.
-Pay attention to the risks presented by gas and vapors in work area.
-Avoid all electrical dangers and pay attention to the risks of electric shock or arc flash hazards.
-Always bear in mind the risk of drowning, electrical accidents, and burn injuries.

Safety equipment

Use safety equipment according to the company regulations. Use this safety equipment within the work area:
-Hard hat
-Safety goggles, preferably with side shields
-Protective shoes
-Protective gloves
-Gas mask
-Hearing protection
-First-aid kit
-Safety devices

NOTICE:
Never operate a unit unless safety devices are installed. Also see specific information about safety devices in other chapters of this manual.

This product can expose you to Hexavalent Chromium, which is known to the state of California to cause cancer and birth defects and other reproductive harm. For more info go to: www.P65Warnings.ca.gov

PRODUCT WARRANTY

Coverage

Xylem undertakes to remedy defects in products from Xylem under these conditions:
-The faults are due to defects in design, materials, or workmanship.
-The faults are reported to a local sales and service representative within the warranty period.
-The product is used only under the conditions that are described in this manual.
-All service and repair work that is done by Xylem authorized personnel.
-Genuine Xylem parts are used.

Limitations

Warranty does not cover defects caused by:
-Deficient maintenance
-Improper installation
-Modifications or changes to the product and installation that are made without consulting a Xylem authorized representative
-Incorrectly executed repair work
-Normal wear and tear

Xylem assumes no liability for the following situations:
-Bodily injury
-Material damages
-Economic losses

Warranty claim

Xylem products are high quality products with expected reliable operation and long life. However, should the need for a warranty claim arise, contact your local sales representative or the manufacturer.

Southgate Process Equipment, Inc.
87 Hickory Springs Industrial Dr.
Canton, GA 30115
Phone: (770) 345-0010
Email: Sales@southgateprocess.com
Website: www.southgateprocess.com

Product Description

GENERAL DESCRIPTION

Brazed plate heat exchangers consist of thin corrugated stainless steel plates between a thicker frame plate and pressure plate that are vacuum brazed together to form a durable, integral piece that can withstand both high pressure and temperature.

The corrugated plate design provides very high heat transfer coefficients resulting in a smaller surface area and compact design.

Installation

WARNING:
Many heat exchangers circulate fluids which are irritating or dangerous to the human system. These fluids could cause problems if bolted or threaded joints are not maintained in a leak tight condition at operating pressures, temperatures, an no flow, ambient conditions.

CAUTION:
Even if fluids are not irritating or dangerous, a leak could cause a slippery situation on the floor below.

CAUTION:
Since one fluid in the heat exchanger is at a higher temperature, any leaks may cause burns.

CAUTION:
Brazed plate heat exchangers have exposed sharp metal surfaces. Protective gloves are recommended during handling.

1. Upon receipt of the exchanger, inspect for shipping damage, especially to the connections. If damage is extensive, notify the carrier immediately. Finally, check the heat exchanger against proper drawings and spec sheets to make sure everything is as expected.

2. Before piping up, inspect all openings in the heat exchanger for foreign material. Remove all plugs and shipping covers immediately prior to installing. Make sure it is thoroughly cleaned to remove all preservation materials, if any were used, unless the material is soluble in the system fluid.

3. For single phase fluids, the heat exchanger can be mounted in any orientation that is convenient and should be piped in a counter current, parallel flow arrangement. For two phase fluids, the heat exchanger should be mounted vertically and piped as shown in Figure 1 and Table 1. Connections may be either on the front or back of the exchanger.

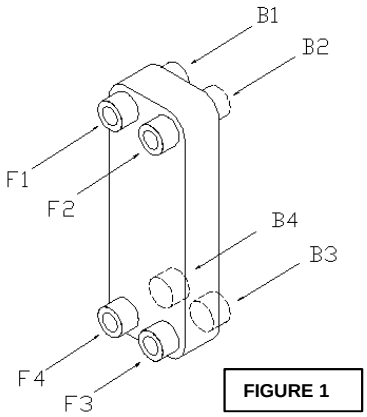

FIGURE 1

Liquid to Liquid			
General		**Snow Melt/ Radiant Floor/ Domestic/ Pool**	
Hot Inlet	F1/B1	Boiler Supply	F1/B1
Hot Outlet	F4/B4	Boiler Return	F4/B4
Cold Inlet	F3/B3	Process Supply	F3/B3
Cold Outlet	F2/B2	Process Return	F2/B2
Refrigeration			
Evaporator		**Condenser**	
Refrig. Inlet	F4/B4	Refrig. Inlet	F1/B1
Refrig. Outlet	F1/B1	Refrig. Outlet	F4/B4
H2O inlet	F2/B2	H2O inlet	F3/B3
H2O outlet	F3/B3	H2O outlet	F2/B2

TABLE 1

4. Provide air vent valves for the heat exchanger so that it can be purged to prevent or relieve vapor or gas binding.

5. Install proper relief valves and temperature alarms to insure the heat exchanger isn't subject to conditions beyond the intended design.

6. Don not weld or braze brackets or attachments directly to body of heat exchanger.

7. For soldering type connections braze with minimum 45% silver solder and at a maximum 1200° F. For welded type connections use TIG or MIG welding. Avoid overheating. A wet cloth or rag should be placed around the base of the connection. A nitrogen purge should be used to avoid internal oxidation. Braze or weld with exchanger in the vertical position.

8. The nozzle connections are designed for normal torque force and damage may occur if over tightened. The use of pipe sealant materials compatible with the system fluids is recommended for threaded type connections. Connection load limits should be observed and are shown in Figure 2, Table 2, and Table 3.

435 psig Standard Design

Model	T (lbs)	F (lbs)	Mb (in-lbs)	Mv (in-lbs)
400, 405	2836	1150	328	636
410, 411, 412	4589	1375	540	1416
415	4589	1375	540	1416
422, 423, 424	6247	2300	2600	4373
432, 433, 434, 435	Consult	Factory	Consult	Factory

TABLE 2

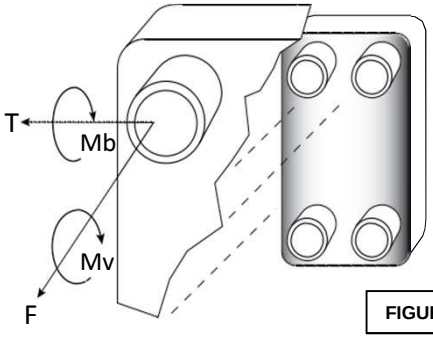

FIGURE 2

150 psig Pressure Design

Model	T (lbs)	F (lbs)	Mb (in-lbs)	Mv (in-lbs)
400	200	100	20	200
410, 411, 412	280	130	27	300

TABLE 3

9. For units with integral mounting tabs ensure unit is fully supported in place prior to tightening the support tab bolts. Do not use the support tab bolts to pull the unit into position. Ensure the correct number and size of bolts for the unit type is used to bolt the unit into place. Bolt unit into place using the maximum torque values in Table 4.

10. For units supplied with mounting studs use Table 5 for maximum torque values. Damage may occur if studs are over tightened. Unit should be fully supported in place prior to tightening the studs. Do not use the studs to pull the unit into position.

11. Units with integral mounting tabs can be mounted using U-bolts or a customer supplied/fabricated bracket.

12. Units with mounting studs can be mounted using a customer supplied/fabricated bracket.

Mounting Tab Bolt Maximum Tightening Force			
Grade 8 Clean Lubricated Bolts			
Unit Type	# Bolts	Bolt Size	Torque lb-ft
400	2	¼" - 20	8
405	4	¼" – 20	8
410, 411, 412, 415	2	3/8" – 16	24
422, 423, 424	4	½" - 13	60

TABLE 4

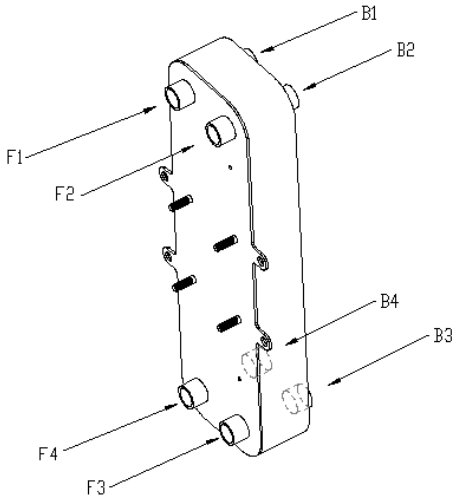

Mounting Stud Maximum Torque Values			
Grade * Clean Lubricated Bolts			
Stud Size	1/4"-20	3/8"-16	1/2"-13
Torque lb-ft	8	24	30

TABLE 5

Operation

WARNING:
A heat exchanger is a pressure vessel designed for operation at certain specific limits of pressure and temperature. The cooling or process system, which includes the heat exchanger, must be safeguarded with safety valves and controls so that these heat exchanger design conditions are not exceeded. All operating personnel should be made aware of these specific design pressures and temperatures prior to start-up.

1. Insure the entire system is clean prior to start-up to prevent plugging of passages with debris. The use of strainers or settling tanks in pipelines leading to the heat exchanger is recommended. The recommended strainer size is 20-24 mesh.

2. Start operating gradually. See Table 6 for suggested start-up and shut-down procedures for most applications. If in doubt, consult the nearest Xylem Heat Transfer representative for specific instructions.

3. Do not operate the heat exchanger under pressure and/or temperature conditions in excess of the specified design limits shown on the nameplate attached to the heat exchanger.

4. Drain all fluids when shutting down to eliminate possible freeze-up and/or corrosion issues.

Type of Fluid	Relative Temperature	Type of Fluid	Relative Temperature	Start-Up Procedure	Shut-Down Procedure
Liquid	Hot	Liquid	Cold	Start both fluids gradually at the same time.	Shut down both fluids gradually at the same time.
Gas	Hot	Liquid	Cold	Start cold fluid first then hot fluid.	Shut down hot fluid gradually then cold fluid.
Condensing Gas	Hot	Liquid	Cold	Start hot fluid first then slowly start cold fluid. Avoid temperature shock.	Shut down cold fluid first then hot fluid.
Liquid or Gas	Hot	Vaporizing Liquid	Cold	Start hot fluid first then cold fluid.	Shut down cold fluid first then hot fluid.

TABLE 6

Maintenance

WARNING:
If the heat exchanger is chemically cleaned, it is important that full characteristics of the fouling material and the chemical cleaning agent be known and care exercised in handling them according to instructions. Use eye protection to prevent damage to your eyes. Wear a respirator when required.

CAUTION:
Do not exceed design conditions of heat exchanger during maintenance.

NOTICE:
Use in accordance with the manufacturer's instructions and check that cleaning compounds are compatible with the materials of the heat exchanger. Since there are a wide variety of cleaning compounds available which are compatible with certain metals and alloy, it is recommended that you contact a representative of the above commercial cleaning products to determine which particular cleaning fluid they would suggest for your type of scaling problem.

1. Clean exchangers subject to fouling (scale, sludge deposits, etc.) periodically, depending on specific conditions. A sludge or scale coating on the plates can reduce effectiveness and overall performance. A marked increase in pressure drop and/or reduction in performance usually indicates cleaning is necessary.

2. As suggested under "Operation", the use of a strainer is recommended if the fluid quality is poor (extensive dirt, debris, and contaminants). If the fluids are relatively clean, there should be little problem with fouling so periodic cleaning is adequate.

3. Some suggested methods of cleaning either side of the heat exchanger are listed below:
   - Back flush with a high pressure stream of hot water to remove loose deposits.
   - Circulate a hot wash oil or light distillate to remove sludge or similar soft deposits.
   - Use a 5% solution of phosphoric acid or oxalic acid to remove more stubborn deposits. For optimum results, the solution should be in a back flush type flow pattern. Rinse heat exchanger with clean fresh water after use.

4. For refrigerant applications it is recommended that the refrigerant circuit not be chemically cleaned.

5. If the heat exchanger is excessively fouled and it cannot be cleaned by commercial cleaning methods, then replacement of the unit is suggested.

Southgate Process Equipment, Inc.
87 Hickory Springs Industrial Drive
Canton, GA 30115
Phone: (770) 345-0010
Email: Sales@southgatepe.com
Website: www.southgatepe.com

xylem
Let's Solve Water

Southgate
Process Equipment, Inc.

Standard Xchange is a trademark of Xylem Inc. or one of its subsidiaries.
© 2018 Xylem Inc. Brazed Plate IOM
September 2018