xylem
Let's Solve Water

INSTRUCTION MANUAL

INSTALLER: PLEASE LEAVE THIS MANUAL FOR THE OWNER'S USE.

Models BCF, HCF & SSCF Fixed Tube Sheet Heat Exchangers

Southgate Process Equipment, Inc.

Standard Xchange
a xylem brand

Southgate Process Equipment, Inc.
87 Hickory Springs Industrial Dr.
Canton, GA 30115
Phone: (770) 345-0010
Email: Sales@southgateprocess.com
Website: www.southgateprocess.com

Table of Contents

Introduction and Safety……2
Introduction……2
Safety……2
Safety terminology and symbols……2
User Safety ……3
General safety rules ……3
Safety equipment ……4

Product Warranty ……4

Product Description……5
General description……5

Installation……6
Installation ……6

Operation……6
Startup ……6

Maintenance…… 7
Maintenance and cleaning Procedures……7

Storage
Storage …… 9

Southgate Process Equipment, Inc. / Phone: (770) 345-0010 / Email: Sales@southgateprocess.com / Website: www.southgateprocess.com

Introduction and Safety

INTRODUCTION

The purpose of this manual is to provide necessary information for:
-Installation
-Operation
-Maintenance

CAUTION:
Read this manual carefully before installing and using the product. Improper use of the product can cause personal injury and damages to property and may void the warranty.

NOTICE:
Save this manual for future reference, and keep it readily available at the location of the unit.

SAFETY

WARNING:
-The operator must be aware of safety precautions to prevent physical injury.
-Operating, installing, or maintaining the unit in any way that is not covered in this manual could cause death, serious injury, or damage to the equipment. This includes any modification to the equipment or use of parts not provided by Xylem. If there is a question regarding the intended use of the equipment, please contact a Xylem representative before proceeding.
-Do not change the service application without the approval of an authorized Xylem representative.

CAUTION:
You must observe the instructions contained in this manual. Failure to do so could result in physical injury, damage, or delays.

Terminology and symbols

It is extremely important that you read, understand, and follow the safety messages and regulations carefully before handling the product. They are published to help prevent these hazards:
-Personal accidents and health problems
-Damage to the product
-Product malfunction

Southgate Process Equipment, Inc. / Phone: (770) 345-0010 / Email: Sales@southgateprocess.com / Website: www.southgateprocess.com

Hazard levels

DANGER:
A hazardous situation which, if not, avoided, will result in death or serious injury

WARNING:
A hazardous situation which, if not, avoided, could result in death or serious injury

CAUTION:
A hazardous situation which, if not, avoided, could result in minor or moderate injury

NOTICE:
-A potential situation which, if not avoided, could result in undesirable conditions
-A practice not related to personal injury

Hazard categories

Hazard categories can either fall under hazard levels or let specific symbols replace the ordinary hazard level symbols.

These are examples of other categories that can occur. They fall under the ordinary hazard levels and may use complementing symbols:
-Crush hazard
-Cutting hazard
-Arc flash hazard

USER SAFETY

General safety rules

Applicable general safety rules:
-Always keep the work area clean.
-Pay attention to the risks presented by gas and vapors in work area.
-Avoid all electrical dangers and pay attention to the risks of electric shock or arc flash hazards.
-Always bear in mind the risk of drowning, electrical accidents, and burn injuries.

This product can expose you to Lead, which is known to the state of California to cause cancer and birth defects and other reproductive harm. For more info go to: www.P65Warnings.ca.gov

Safety equipment

Use safety equipment according to the company regulations. Use this safety equipment within the work area:
-Hard hat
-Safety goggles, preferably with side shields
-Protective shoes
-Protective gloves
-Gas mask
-Hearing protection
-First-aid kit
-Safety devices

NOTICE:
Never operate a unit unless safety devices are installed. Also see specific information about safety devices in other chapters of this manual.

PRODUCT WARRANTY

Coverage

Xylem undertakes to remedy defects in products from Xylem under these conditions:
-The faults are due to defects in design, materials, or workmanship.
-The faults are reported to a local sales and service representative within the warranty period.
-The product is used only under the conditions that are described in this manual.
-All service and repair work that is done by Xylem authorized personnel.
-Genuine Xylem parts are used.

Limitations

Warranty does not cover defects caused by:
-Deficient maintenance
-Improper installation
-Modifications or changes to the product and installation that are made without consulting a Xylem authorized representative
-Incorrectly executed repair work
-Normal wear and tear

Xylem assumes no liability for the following situations:
-Bodily injury
-Material damages
-Economic losses

Warranty claim

Xylem products are high quality products with expected reliable operation and long life. However, should the need for a warranty claim arise, contact your local sales representative or the manufacturer.

Southgate Process Equipment, Inc. / Phone: (770) 345-0010 / Email: Sales@southgateprocess.com / Website: www.southgateprocess.com

Product Description

GENERAL DESCRIPTION

BCF, HCF & SSCF heat exchangers are fixed tube heat exchangers using 1/4", 3/8" and 5/8" diameter tubes. BCF units use copper tubes, brass shells and CI bonnets. SSCF units are made of all 316 S/S materials. Material options exist for both products. Tubes are roller expanded into the tube shells.

Southgate Process Equipment, Inc. / Phone: (770) 345-0010 / Email: Sales@southgateprocess.com / Website: www.southgateprocess.com

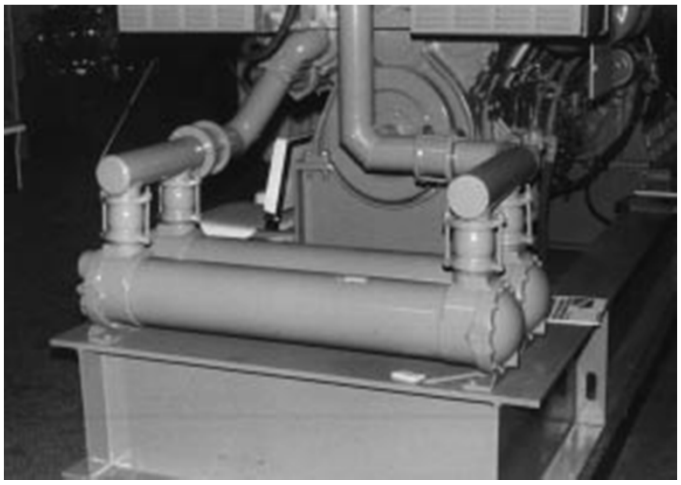

INSTALLATION

1. Before installing this equipment, environment and service conditions should be checked for compatibility with materials of construction. Contact your nearest Xylem Representative if you are not sure what the actual materials of construction are.
2. Provide valves and by-passes in the piping system so that both the shell and tube sides may be by-passed to permit inspection or repair.
3. Provide thermometer well and pressure gauge connections in all piping to and from the unit and locate as near the unit as possible.
4. Provide convenient means for frequently cleaning the unit as suggested under "Maintenance."
5. Provide necessary air vent cocks for units so they can be purged to prevent or relieve vapor or gas binding of either the tube or the shell sides.
6. Foundations must be adequate so that exchangers will not settle and cause piping strains. Foundation bolts should be set to allow for setting inaccuracies. In concrete footings, pipe sleeves at least one size larger than bolt diameter slipped over the bolt and cast in place are best for this purpose, as they allow the bolt center to be adjusted after the foundation has set.
7. Loosen foundation bolts at one end of unit to allow free expansion of shells. Oval holes in foundation brackets are provided for this purpose.
8. Set exchangers level and square so that pipe connections may be made without forcing.
9. Inspect all openings in exchanger for foreign material. Remove all thread protectors and shipping pads just before installing. Do not expose units to the elements with pads or other covers removed from openings since rain water may enter the unit and cause severe damage due to freezing.
10. Be sure the entire system is clean before starting operation to prevent plugging of tubes with sand or refuse. The use of strainers in settling tanks in pipe lines leading to the unit is recommended.
11. Drain connections should not be piped to a common closed manifold.
12. Location of the operating fluids in the heat exchanger can be a function of the application. A few tips for the location of the operating fluids are:
    a. As a cooler, the preferred arrangement is with the hot medium through the shell and the cooling medium through the tubes. When the hot fluid is dirty or fouling, it is better to put it through the tubes because they are easier to clean. With single pass units be sure the shell inlet is on the same end as the tube side outlet. In two pass units, the shell inlet should be at the inlet-outlet bonnet end. It is customary for the cooling medium to enter the lower bonnet connection, although this can be reversed if necessary.
    b. As a heater, the hot medium, usually steam or hot water, must be in the shell. If it is steam, either of the shell connections, or both, can be used, dependent on the actual entering velocities.
    c. For the above applications and for temperatures above 150°F, the higher temperature fluid should be circulated through the shell side of the exchanger and precaution should be taken to avoid shock from abrupt changes in fluid circulation temperatures.
13. Steam hammer can cause serious damage to the tubes of any heat exchanger. A careful consideration of the following points before an installation is made can prevent costly repairs which may be caused by steam hammer.
    a. A vacuum breaker and/or vent, should be used in accordance with the type of steam system installed.
    b. The proper trap for the steam system installed should be used.
    c. The trap and the condensate return line to the trap should be properly sized for the total capacity of the convertor.
    d. The trap should be sized for the pressure at the trap, not the inlet pressure to the steam controller.
    e. The trap must drain into an unpressurized condensate return system. Condensate return lines must not be run at an elevation above the bottom of the heat exchanger. To do so may result in a buildup of the condensate level in the heat exchanger, which could cause water hammer and damaged tubes.

⚠**CAUTION:** During times of shutdown, volumetric expansion can occur. We recommend the installation of a properly sized relief valve on both sides of the heat exchanger.

OPERATION

1. When placing a unit in operation, open the vent connections and start to circulate the cold medium only. Be sure that the passages in the exchanger are entirely filled with the cold fluid before closing the vents. The hot medium should then be introduced gradually until all passages are filled with liquid, close vents and slowly bring the unit up to temperature.
2. Start operation gradually. Do not admit hot fluid to the unit suddenly when empty or cold. Do not shock unit with cold fluid when unit is hot.

⚠**CAUTION:** Fluids must be gradually introduced to the unit. Failure to do so can cause damage to the heat exchanger.

3. In shutting down, flow of hot medium should be shut off first. If it is necessary to stop circulation of cooling medium the circulation of hot medium should also be stopped by by-passing or otherwise.
4. Do not operate equipment under conditions in excess of those specified on nameplate.

⚠WARNING: Failure to operate the heat exchanger within the design pressure and temperature on the nameplate may result in damage to the heat exchanger and potential injury to adjacent personnel.

5. Drain all fluids when shutting down to eliminate possibility of freezing and corrosion. To guard against water hammer, condensate should be drained from steam heaters and similar apparatus both when starting up and when shutting down.
6. In all installations there should be no pulsation of fluids since this causes vibration and strain with resulting leaks.
7. All gasketed joints should be checked after starting for leaks and tightened if necessary.

⚠WARNING: The BCF, HCF & SSCF exchangers are suit able for use as heaters using steam as the heating medium. These exchangers are, however, fixed tubesheet units and, therefore, not designed to absorb thermal shock inherent in the intermittent service of on and off heating with frequent short intervals of demand. Their recommended use is where service is continuous or steady, with relatively long periods between shutdown and start-up. Heat exchanger failure due to thermal shock may result in potential personal injury.

MAINTENANCE

1. Do not open heads until all pressure is off equipment and the unit is drained.

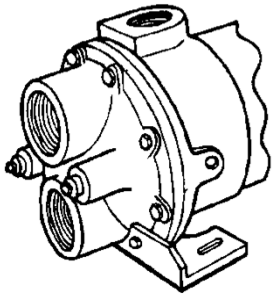

2. Remove the bonnets. Inspect all tubes carefully for possible erosion, corrosion, or foreign material.
3. Inspect all anodes to be sure they are neither excessively corroded nor insulated with scale. Scrape to a bright surface.
4. Inspect filters in the system to prevent foreign matter from entering the exchanger.
5. Do not blow out heat exchangers with air when operating fluids are of a flammable or otherwise hazardous nature.

⚠WARNING: Proper precautions must be taken (special clothing, equipment, etc.) to protect personnel from injury due to escaping fluids.

f. Provide convenient means for frequently cleaning heat exchangers as suggested below:

   a. Circulating hot wash oil or light distillate through tubes or shell at good velocity will effectually remove sludge or other similar soft deposits.

   b. Soft salt deposits may be washed out by circulating hot fresh water.

   c. Some cleaning compounds on the market, such as "Oakite" may be used to advantage for removing sludge or coke, provided hot wash oil or water, as described above, does not give satisfactory results.

   d. If none of the above described methods are effective for the removal of hard scale or coke a mechanical means may be used. The interior of the tubes may be rodded.

   e. The exterior or shell side of the tubes of a fixed sheet heat exchanger can only be cleaned chemically by using a chemical dissolved in water solution. We suggest that the user contact the manufacturer of the cleaning chemical for instructions.

⚠WARNING: Proper precautions must be taken (special clothing, equipment, etc.) to protect personnel from injury due to escaping fluids.

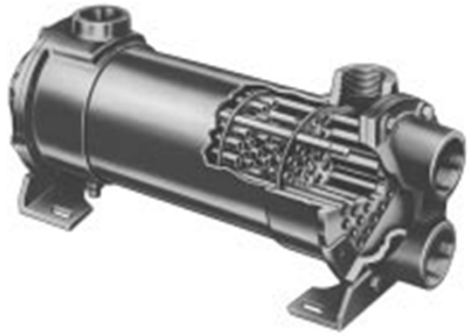

7. When replacing heads, use a torque wrench.* Tighten 1/4" diameter bolts (2" diameter units) to 6 ft-lbs., 5/16" diameter bolts (3" & 4" diameter units) to 16 ft-lbs., and 3/8" diameter bolts (5", 6", & 8" diameter units) to 24 ft-lbs. If the gasket joint still leaks, tighten in 2 ft-lb. increments until leak stops.
   *The above torque values apply to well lubricated nut bearing surfaces.

8. All bolted joints should be tightened uniformly and in a diametrically staggered pattern as illustrated below:

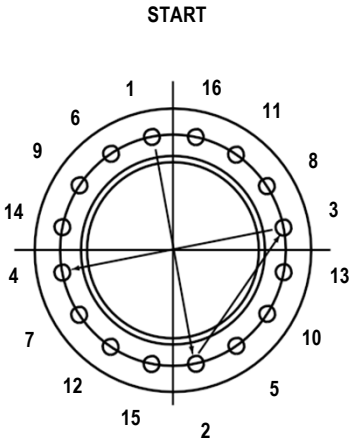

9. Frequently and at regular intervals, observe interior and exterior condition should be according to scale build-up.

> ⚠ **CAUTION:** Neglect in keeping all tubes clean may result in complete stoppage of flow through some tubes with consequent overheating of these tubes, resulting in severe expansion strains, leaking tube joints, and damage to the heat exchanger.

10. Exchangers subject to fouling or scaling should be cleaned periodically. A light sludge or scale coating on the tube greatly reduces its effectiveness. Therefore, low-fouling fluids should be used in the shell side of all heat exchangers with non-removable tube bundles. A marked increase in pressure drop and/or reduction in performance usually indicates cleaning is necessary, especially if the unit has been checked for air or vapor binding and this has been found not to be the cause. Since the difficulty of cleaning increases rapidly as the scale thickens or deposits increase, the interval between cleanings should not be excessive. interior and exterior condition should be according to scale build-up.

ANODES

1. Some exchangers may be equipped with renewable anodes. The purpose of the anodes is to inhibit electrolytic corrosion. In order to remain active the anodes must be kept free of scale or other surfaces coatings.
2. On some applications where electrolytic corrosion is not a problem, pipe plugs may be substituted for the anode. The pipe plug material selected should be softer than the base part to avoid pipe thread damage.

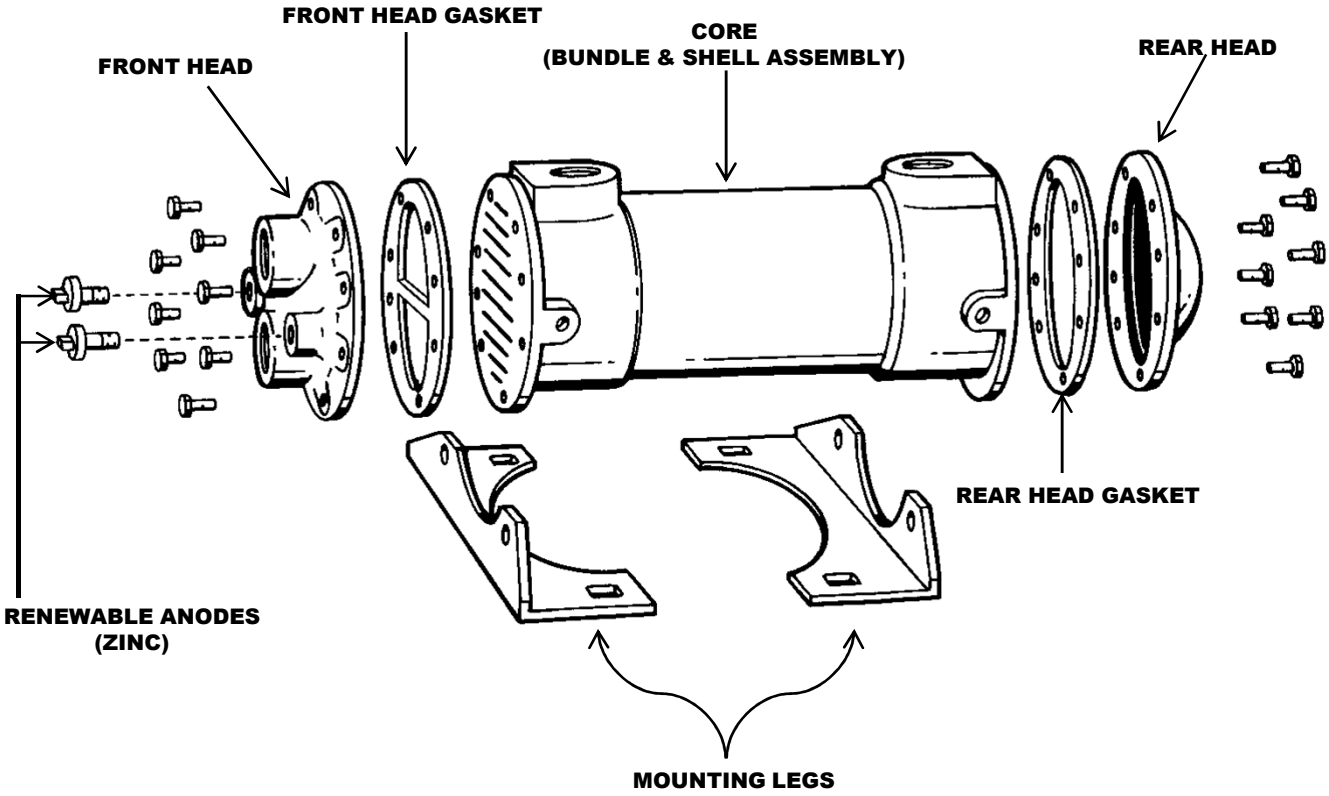

Storage

NOTE: If the heat exchanger cannot be installed and put into operation immediately upon receipt at the jobsite, certain precautions are necessary to prevent deterioration during storage. Responsibility for integrity of the heat exchangers must be assumed by the user. Xylem will not be responsible for damage, corrosion or other deterioration of heat exchanger equipment during transit and storage. Good storage practices are important, considering the high costs of repair or replacement, and the possible delays for items which require long lead times for manufacture. The following suggested practices are provided solely as a convenience to the user, who shall make his own decision on whether to use all or any of them.

1. On receipt of the heat exchanger, inspect for shipping damage to all protective covers. If damage is evident, inspect for possible contamination and replace protective covers as required. If damage is extensive, notify the carrier immediately.

2. If the heat exchanger is not to be placed in immediate service, take precautions to prevent rusting or contamination.

3. The choice of preservation of interior surfaces during storage for other service applications depends upon your system requirements and economics. Only when included in the original purchase order specifications will specific preservation be incorporated prior to shipment from the factory.

4. Remove any accumulations of dirt, water, ice or snow and wipe dry before moving exchangers into indoor storage. If unit was not filled with oil or other preservative, open drain plugs to remove any accumulated moisture, then reseal. Accumulation of moisture usually indicates rusting has already started and remedial action should be taken.

5. Store under cover in a heated area, if possible. The ideal storage environment for heat exchangers and accessories is indoors, above grade, in a dry, low humidity atmosphere which is sealed to prevent entry of blowing dust, rain or snow. Maintain temperatures between 70°F and 105°F (wide temperature swings may cause condensation and “sweating” of steel parts). Cover windows to prevent temperature variations caused by sunlight. Provide thermometers and humidity indicators at several points, and maintain atmosphere at 40% relative humidity or lower.

6. In tropical climates, it may be necessary to use trays of renewable desiccant (such as silica gel), or portable dehumidifiers, to remove moisture from the air in the storage enclosure. Thermostatically controlled portable heaters (vented to outdoors) may be required to maintain even air temperatures inside the enclosure.

7. Inspect heat exchangers and accessories frequently while they are in storage.
   If paint deterioration begins, as evidenced by discoloration or light rusting, consider touch-up or repainting. If the unit is painted with our standard shop enamel, areas of light rust may be wire brushed and touched-up with any good quality air-drying synthetic enamel. Units painted with special paints (when specified on customers Obtain specific information from the paint manufacturer. Painted steel units should never be permitted to rust or deteriorate to a point where their strength will be impaired. A light surface rust, on steel units which can be repainted after installation, will not generally cause any harm. (See Items 3 and 4 for internal surface preservation.)

10. If the internal preservation (Items 3 and 4) appears inadequate during storage, consider additional corrosion prevention measures and more frequent inspections. Interiors coated with rust preventive should be restored to good condition and recoated promptly if signs of rust occur.

11. In shutting down, flow of hot medium should be shut off first. If it is necessary to stop circulation of cooling medium the circulation of hot medium should also be stopped by bypassing or otherwise.

12. Drain all fluids when shutting down to eliminate the possibility of freezing and corrosion. To guard against water hammer, condensate should be drained from steam heaters and similar apparatus both when starting up and when shutting down.

13. Heat exchangers that are out of service for extended periods of time should be protected against corrosion as described in the storage requirements for new heat exchangers.

Southgate Process Equipment, Inc.
87 Hickory Springs Industrial Dr.
Canton, GA 30115
Phone: (770) 345-0010
Email: Sales@southgateprocess.com
Website: www.southgateprocess.com

Standard Xchange is a trademark of Xylem Inc. or one of its subsidiaries.
© 2018 Xylem Inc. BCF HCF SSCF
September 2018